Bay Area Scientists in Schools Presentation Plan

Lesson Name Chemistry of Soap
Presenter(s) Miriam Bowring and members of the Bergman and Tilley chemistry research groups at UC Berkeley

Grade Level 5th

CA State Standards Connection(s):

PS-1) Elements and their combinations account for all the varied types of matter in the world. As a basis for understanding this concept:

- PS-1.a) Students know that during chemical reactions the atoms in the reactants rearrange to form products with different properties.
- PS-1.b) Students know all matter is made of atoms, which may combine to form molecules.
- PS-1.f) Students know differences in chemical and physical properties of substances are used to separate mixtures and identify compounds.
- PS-1.6) Students know properties of solid, liquid, and gaseous substances, such as water (H2O).

IE-6) Scientific progress is made by asking meaningful questions and conducting careful investigations. As a basis for understanding this concept and addressing the content in the other three strands, students should develop their own questions and perform investigations.

Common Core Standards:

ELA/Literacy:

W.5.8 Recall relevant information from experiences or gather relevant information from print and digital sources; summarize or paraphrase information in notes and finished work, and provide a list of sources.

Mathematics:

MP.2 Reason abstractly and quantitatively.
MP.5 Use appropriate tools strategically.
MP.4 Model with mathematics.

FOSS Connections:

Grade 5 Module: *Mixture and Solutions*
Investigation 1: *Separating Mixtures*

Next Generation Science Standards:

5-PS1-1. Develop a model to describe that matter is made of particles too small to be seen.
5-PS1-3. Make observations and measurements to identify materials based on their properties.
5-PS1-4. Conduct an investigation to determine whether the mixing of two or more substances results in new substances.

Science & Engineering Practices	Disciplinary Core Ideas	Crosscutting Concepts
Developing and Using Models Modeling in 3–5 builds on K–2 experiences and progresses to building and revising simple models and using models to represent events and design solutions. Develop a model to describe phenomena. (**5-PS1-1**) *Planning and Carrying Out Investigations* Planning and carrying out investigations to answer questions or test solutions to problems in 3–5 builds on K–2 experiences and progresses to include investigations that control variables and provide evidence to support explanations or design solutions. Conduct an investigation collaboratively to produce data to serve as the basis for evidence, using fair tests in which variables are controlled and the number of trials considered. (**5-PS1-4**) Make observations and measurements to produce data to serve as the basis for evidence for	*PS1.A: Structure and Properties of Matter* Matter of any type can be subdivided into particles that are too small to see, but even then the matter still exists and can be detected by other means. A model showing that gases are made from matter particles that are too small to see and are moving freely around in space can explain many observations, including the inflation and shape of a balloon; the effects of air on larger particles or objects. (**5-PS1-1**) The amount (weight) of matter is conserved when it changes form, even in transitions in which it seems to vanish. (**5-PS1-2**) Measurements of a variety of properties can be used to identify materials. (Boundary: At this grade level, mass and weight are not distinguished, and no attempt is made to define the unseen particles or explain the atomic-scale mechanism of evaporation and condensation.) (**5-PS1-3**) *PS1.B: Chemical Reactions* When two or more different substances are mixed, a new substance with different properties may be formed. (**5-PS1-4**) No matter what reaction or change in properties occurs, the total weight of the substances does not change. (Boundary: Mass and weight are not distinguished at this grade level.) (**5-PS1-2**)	*Cause and Effect* Cause and effect relationships are routinely identified, tested, and used to explain change. (**5-PS1-4**) *Scale, Proportion, and Quantity* Natural objects exist from the very small to the immensely large. (**5-PS1-1**) Standard units are used to measure and describe physical quantities such as weight, time, temperature, and volume. (**5-PS1-2**),(**5-PS1-3**) *Connections to Nature of Science* Scientific Knowledge Assumes an Order and Consistency in Natural Systems Science assumes consistent patterns in natural systems. (**5-PS1-2**)

Abstract:

To teacher: During this lesson, students will observe and test the macroscopic properties of common substances including water, oil, and soap, and learn to connect those properties with the molecular structures of those substances. Critical thinking and problem solving skills will be developed.

To students: We will play with water, oil, and soap, and make some discoveries about molecules.

Student objectives:

Students will become comfortable asking scientific questions, making hypotheses, and testing them.

Students will understand that the properties of molecules such determine the properties of bulk materials such as water and oil.

Students will understand that soap molecules are specially constructed to have one end that mixes with dirt and another end that mixes with water.

Vocabulary/Definitions: *3 – 6 important (new) words*

- **Polar**: having two differently charged ends
- **non-polar**: not having two differently charged ends
- **molecule**: a group of atoms that are bonded together
- **attract**: pull close

Materials:

What will you bring with you?

- soap
- oil
- waxed paper
- graphite
- corks
- plastic cups
- handouts
- periodic table
- magnetic marbles
- yarn
- dry ice soap bubble demonstration
- paper towels

What should students have ready?

- pencils

Classroom Set-up:

We prefer if there is a source of water, and paper towels available for cleaning up potential small spills of soapy water. If you have a periodic table on display, that would be nice but not required. We will need a blackboard or whiteboard or overhead projector with appropriate writing and erasing tools.

The students will be shifting between working with a partner at a desk and looking up front to the board. We prefer that partners are chosen or assigned ahead of time. We will structure cleanup time into the lesson, and need less than five minutes to set up.

Classroom Visit

1. Personal Introduction: ____2_____ Minutes

We are chemists and so are you, since we are all doing chemistry today. We come from UC Berkeley where we get to do experiments every day. We're made of molecules and so are you, and so is everything, and today we're going to find out why that matters. (Who knows what a molecule is? Is it big or small?)

2. Topic Introduction: _____7_____ Minutes

Who knows the chemical formula of water? Draw H_2O on the board. Water is special. Write POLAR on the board. Brainstorm associations with that word (polar bears, etc.). Connect to our definition of polar, explain that water is polar, bring out magnetic marbles to demonstrate. Polar molecules attract each other. What do you think the opposite of polar is? NONPOLAR.

3. Learning Experience(s): 40 Minutes

During each exploration session, students will be talking to their partners, writing answers on their handouts, and discussing with us as we move among them. We will be constantly asking them, "Why do you think it's doing that?" The short full group discussions will cement what we've learned.

The explorations will follow the steps given on the handout.

Exploration 1: Every student gets a handout, every pair gets a cork, a cup, and access to water.

1. You will put a cork into a cup of water. Before you do so, fill in the two sketches below with your prediction of how the system will look.
2. Put water into a cup and then a cork. Record what happens in two sketches, one from the side and one from the top.
3. Challenge: using only water, the cup, and the cork, get the cork to float on the water so that it does not touch the sides of the cup. Record your solution in two sketches, one from the top and one from the side.

Discussion 1: Students volunteer to share their sketches on the board. WHY did the cork go to the side at first? WHY can water go over the top of the glass and not spill out? Because water is polar; water molecules are attracted to each other. Use magnetic marbles to illustrate.

Exploration 2: Every pair trades in its cork for a piece of graphite and a paper towel.

1. You will drop a piece of pencil lead into a cup of water vertically. Before you do so, make a sketch predicting how the system will look afterwards.
2. Drop the lead into the water vertically. Record what happens in a sketch.
3. Take the lead out of the water and dry it off carefully.
4. Challenge: get the lead to float on top of the water. Record what it looks like in a sketch.
5. You will drop some soap into the water that has the lead on it. Before you do so, make a sketch predicting how the system will look afterwards.
6. Gently pour soap into the water. Record what happens in a sketch.

Discussion 2: Students volunteer to share their sketches on the board. WHY did the graphite float horizontally but fall in vertically? Because water is polar, water molecules are attracted to each other. Use magnetic marbles and pencil to illustrate.

Exploration 3: Every pair trades in its graphite for waxed paper and a dropper. Oil and soap are distributed.

1. Get a piece of wax paper and fold up all the edges so that liquids will not run off the sides.
2. You will put a drop of water and a drop of oil on the piece of wax paper. Before you do so, draw a sketch predicting what each drop will look like.

3. Put a drop of water and a drop of oil on the wax paper. Draw a sketch of what each drop looks like.
4. Tilt the paper around until the drops are touching. What do they look like? Use a picture or words.
5. You will put a drop of soap on the wax paper and bring it into contact with the oil and water. Before you do so, predict what it will look like. Use a picture or words.
6. Put a drop of soap on the wax paper and bring it into contact with the oil and water. What happened? Use a picture or words.

Discussion 3: Students volunteer to share their sketches on the board. WHY are oil and water drops shaped that way? Because water is polar; water molecules are attracted to each other. Oil isn't. Use magnetic marbles and yarn to demonstrate. WHY don't oil and water mix? Because water is polar; water molecules are attracted to each other. Oil isn't. Use magnetic marbles and yarn to demonstrate. WHY does soap flatten the water bubble? It has a hydrophobic tail and a hydrophilic head.

Cleanup: All supplies are returned and water is poured out.

4. Wrap-up: Sharing Experiences and Building Connections 8 Minutes

Putting the pieces together – how will students share learning, interpret experience, build vocabulary? Discussion of how soap gets the dirt off of your hands. (It has a hydrophobic tail and a hydrophilic head, can interact with both dirt and water.) Use magnetic marbles and yarn to demonstrate.
Final demonstration: CO_2 released from dry ice and water is passed through a soapy water film to make beautiful irridescent and heavy bubbles. Soap is interesting!

5. Connections & Close: 3 Minutes
How can kids learn more? Thanks and good-bye! Clean-up.
Keep asking questions and playing with stuff!

Differentiated Instruction:

English Learners: Repeat directions, if necessary, and physically model how to perform experiments. Write vocabulary words on the board and read words aloud. Vocabulary words can also be visually demonstrated using an illustration or action and redefined in very simplistic terms.

Advanced Learners: Have students think of other hypotheses about molecules, and allow students to test their hypotheses with simple experiments at each exploration center.

Follow-up Possibilities

ELA Activity:
Students answer the following prompt:
"Write a letter to a friend explaining how soap works."

Mathematics Activity:
Have students write mixture equations using fractions or have students write the ratios for different solutions.

Other:

Home or class activity (see below):

Name_____

Chemistry of Soap Worksheet

1. You will put a cork into a cup of water. Before you do so, fill in the two sketches below with your prediction of how the system will look.

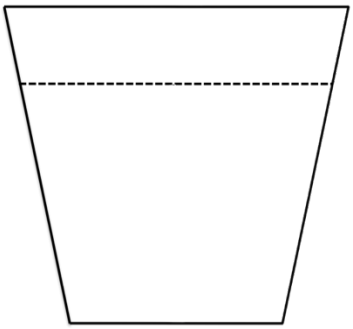

SIDE VIEW

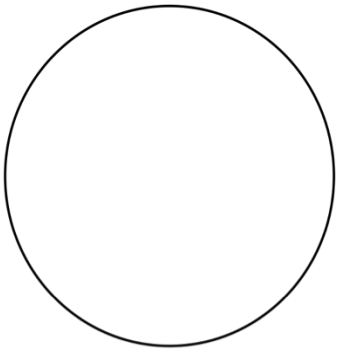

TOP VIEW

2. Put water into a cup and then a cork. Record what happens in two sketches, one from the side and one from the top.

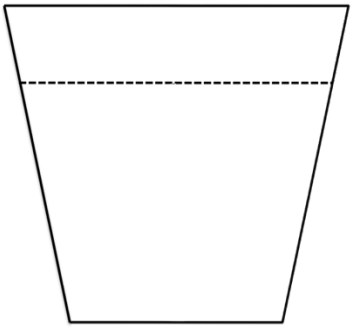

SIDE VIEW

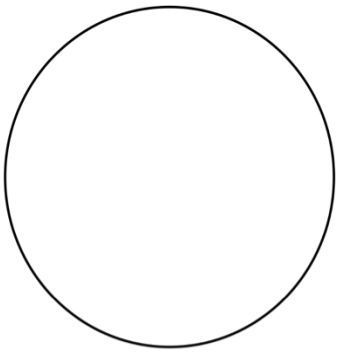

TOP VIEW

3. Challenge: using only water, the cup, and the cork, get the cork to float on the water so that it does not touch the sides of the cup. Record your solution in two sketches, one from the top and one from the side.

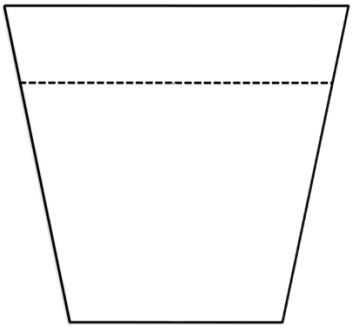

SIDE VIEW

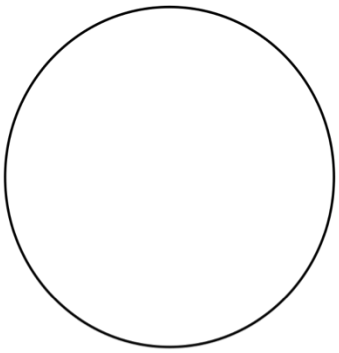

TOP VIEW

4. You will drop a piece of pencil lead into a cup of water vertically. Before you do so, make a sketch predicting how the system will look afterwards.

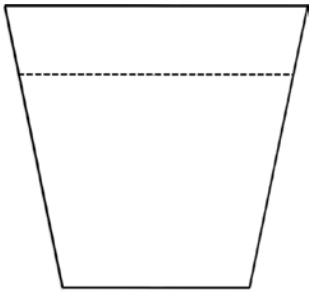

SIDE VIEW

5. Drop the lead into the water vertically. Record what happens in a sketch.

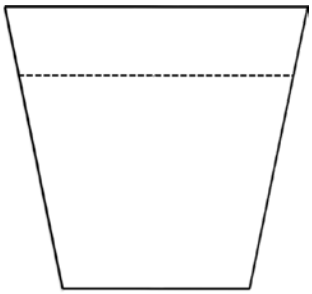

SIDE VIEW

6. Take the lead out of the water and dry it off carefully.

7. Challenge: get the lead to float on top of the water. Record what it looks like in a sketch.

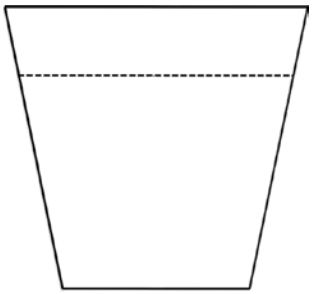

SIDE VIEW

8. You will drop some soap into the water that has the lead on it. Before you do so, make a sketch predicting how the system will look afterwards.

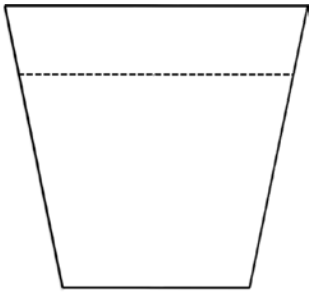

SIDE VIEW

9. Gently pour soap into the water. Record what happens in a sketch.

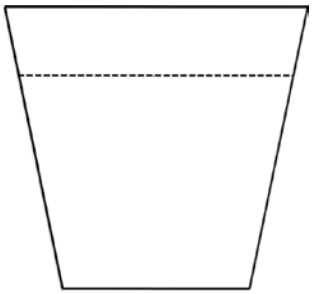

SIDE VIEW

10. Get a piece of wax paper and fold up all the edges so that liquids will not run off the sides.

11. You will put a drop of water and a drop of oil on the piece of wax paper. Before you do so, draw a sketch predicting what each drop will look like.

OIL WATER

12. Put a drop of water and a drop of oil on the wax paper. Draw a sketch of what each drop looks like.

OIL WATER

13. Tilt the paper around until the drops are touching. What do they look like? Use a picture or words.

14. You will put a drop of soap on the wax paper and bring it into contact with the oil and water. Before you do so, predict what it will look like. Use a picture or words.

15. Put a drop of soap on the wax paper and bring it into contact with the oil and water. What happened? Use a picture or words.